15M Models
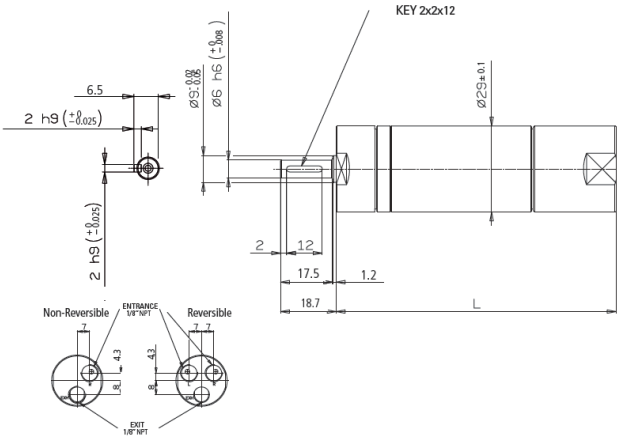
Model Number	L
15M1900D-D6	94.5
15M550D-D6	94.5
15M375D-D6	94.5
15M260D-D6	94.5
15M140D-D6	120
15M95D-D6	120
15M70D-D6	120
15M1600R-D6	94.5
15M440R-D6	94.5
15M300R-D6	94.5
15M220R-D6	94.5
15M120R-D6	120
15M80R-D6	120
15M58R-D6	120